Han® 3 A RJ45 Hybrid

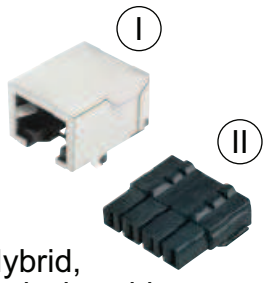

Han® 3 A, Hybrid, components device side panel feed-throughs

Identification	Part No.	Drawing	Dimensions in mm
RJ45 female for direct device integration solder variant SMD 90° angled I	 09 45 551 1100[1)] 09 45 551 1110[2)]	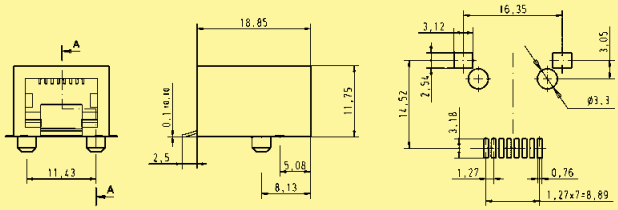	pcb layout
Power module with 4 contacts for direct device integration II	09 45 525 0040	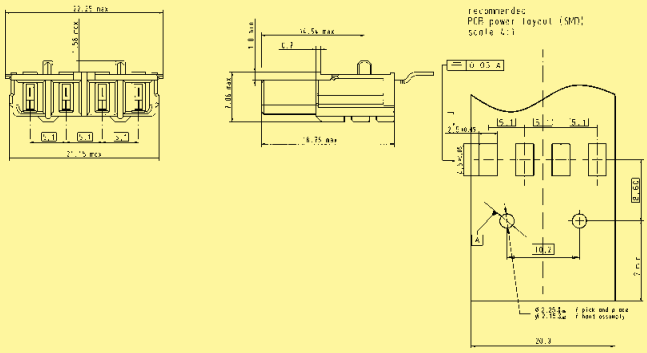	
Housing bulkhead mounting **separate** incl. flat seal for direct device integration Plastic version, black Metal version Standard, grey III	 09 45 525 0021 10 12 005 1004	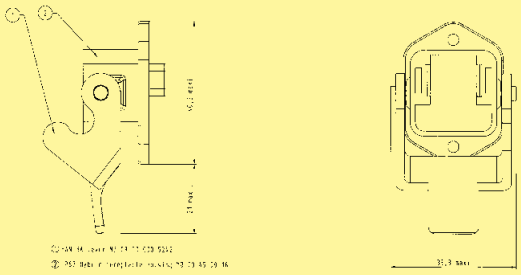	Dimensions valid for plastic version
Panel feed-through set incl. housing bulkhead mounting and instruction manual Plastic version, black Metal version Standard, grey Metal version M, black IV	 09 45 225 1300 10 12 005 1002 09 45 215 1301	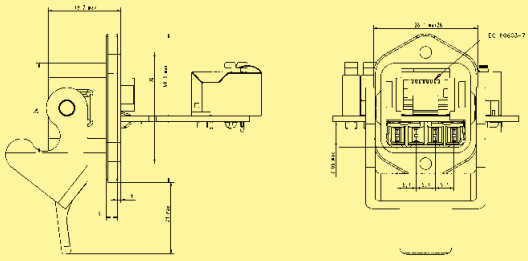	
Protection cover for panel feed-through IP 65 / IP 67 Plastic version, black Metal version Standard, grey Metal version M, black	 09 20 003 5449 09 20 003 5425 09 37 003 5405	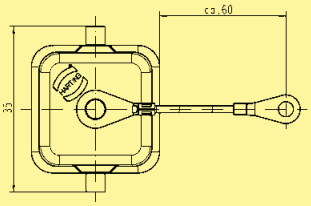	

[1)] Packaging: Blister à 120 pieces
[2)] Packaging: Tape & Reel à 130 pieces

Technical characteristics and general informations see page 04.15