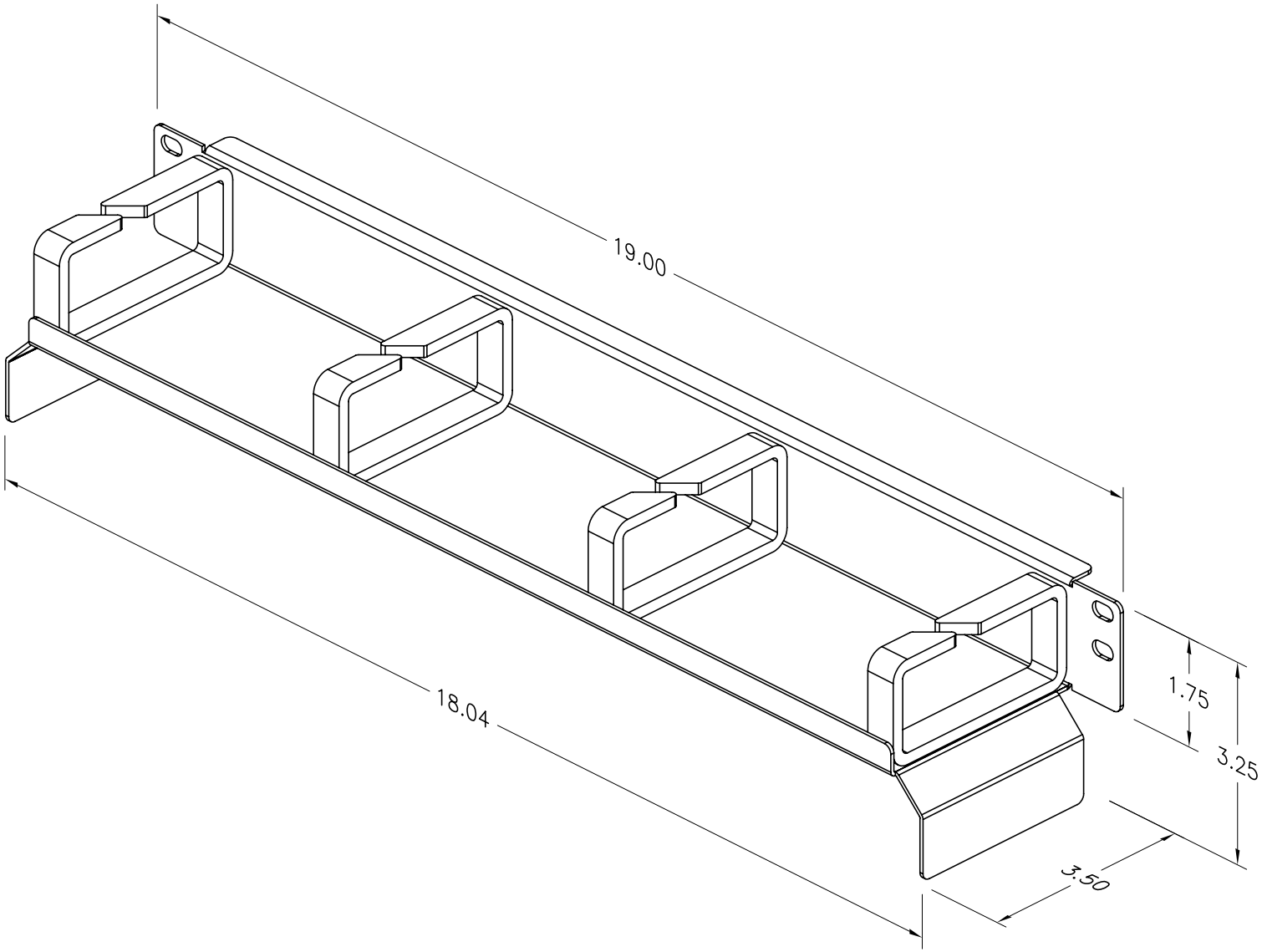

*** NOTICE ***
THIS DOCUMENT CONTAINS CONFIDENTIAL AND/OR PROPRIETARY INFORMATION INTENDED FOR USE ONLY BY THE INDIVIDUAL(S) SPECIFIED HEREIN AND ONLY FOR THE PURPOSE(S) PROVIDED. NEITHER THIS DOCUMENT, NOR ANY INFORMATION CONTAINED HEREIN, MAY BE COPIED, DISTRIBUTED, DISCLOSED TO ANY THIRD PARTY OR USED IN ANY MANNER OTHER THAN FOR WHICH IT HAS BEEN PROVIDED, WITHOUT THE PRIOR WRITTEN CONSENT OF ORTRONICS, INC.

ORTRONICS®
NEW LONDON, CT 06320
(860) 445-3800

DWN.BY: Dbogue	DATE 02/03/98	
CHK.BY: S. LEVESQUE	05/05/06	
APP.BY: M. MARTICH	05/05/06	

TITLE
WIRE MANAGEMENT PANEL
3.5 X 1.75 RINGS, W/WATER FALL, 1 UNIT

SIZE	CAD FILE	PART NUMBER	REV
A	60400189C	OR-60400189	03

SCALE	REL DATE	SHEET
NONE	05/05/06	1 OF 1