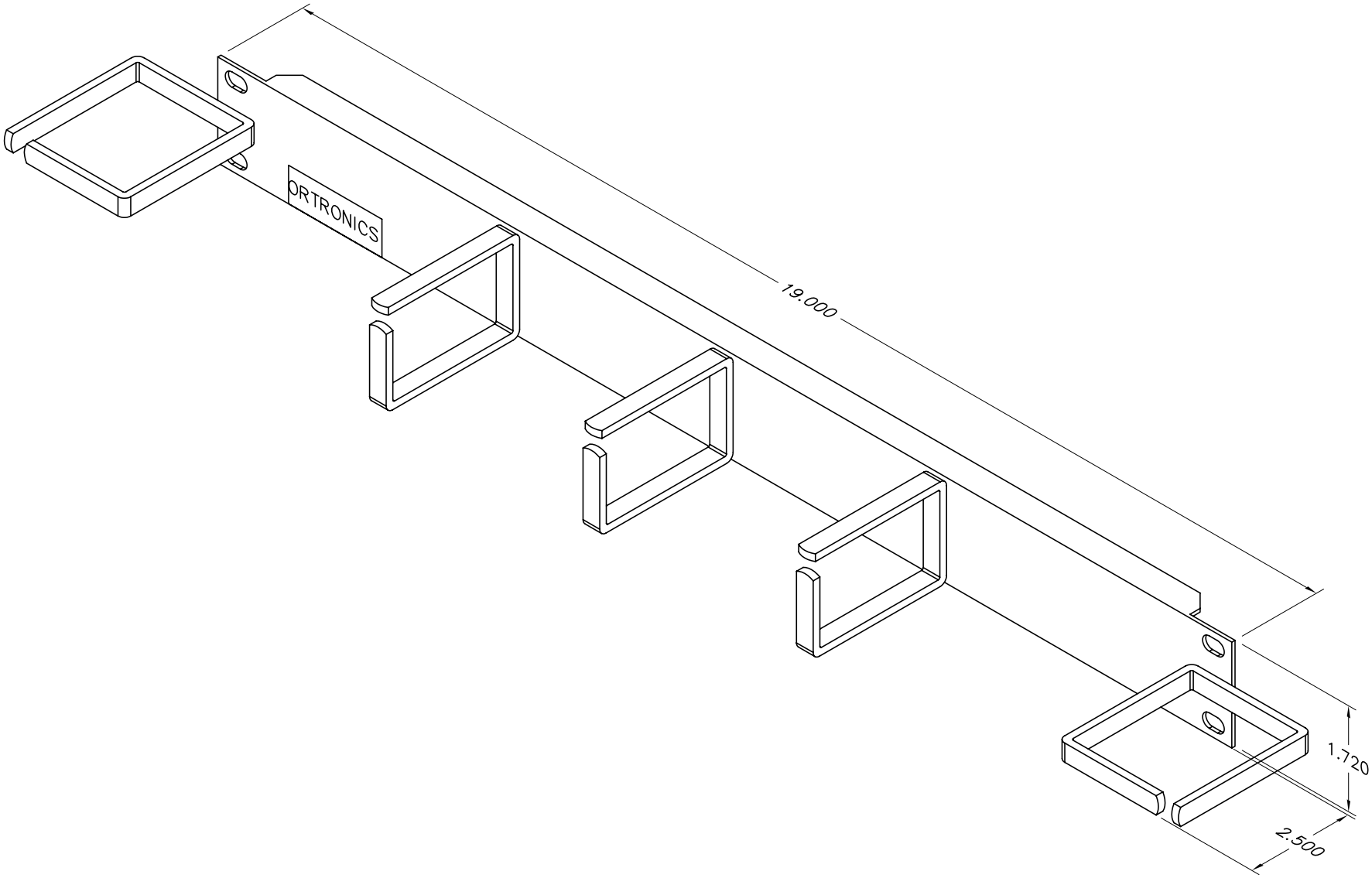

*** NOTICE ***
THIS DOCUMENT CONTAINS CONFIDENTIAL AND/OR PROPRIETARY INFORMATION INTENDED FOR USE ONLY BY THE INDIVIDUAL(S) SPECIFIED HEREIN AND ONLY FOR THE PURPOSE(S) PROVIDED. NEITHER THIS DOCUMENT, NOR ANY INFORMATION CONTAINED HEREIN, MAY BE COPIED, DISTRIBUTED, DISCLOSED TO ANY THIRD PARTY OR USED IN ANY MANNER OTHER THAN FOR WHICH IT HAS BEEN PROVIDED, WITHOUT THE PRIOR WRITTEN CONSENT OF ORTRONICS, INC.

ORTRONICS®
NEW LONDON, CT 06320
(860) 445-3800

DWN.BY: Dbogue	DATE 04/04/01	
CHK.BY: S. LEVESQUE	05/05/06	
APP.BY: M. MARTICH	05/05/06	

TITLE
WIRE MANAGEMENT PANEL, 1.75" x 19"
W/2.25"x2.50"(VERT) – 1.72"x2.5"(HORZ) RINGS

SIZE	CAD FILE	PART NUMBER	REV
A	60400132C	OR-60400132	02

SCALE	REL DATE	SHEET
NONE	05/05/06	1 OF 1