THIS COPY IS PROVIDED ON A RESTRICTED BASIS AND IS NOT TO BE USED IN ANY WAY DETRIMENTAL TO THE INTERESTS OF PANDUIT CORP.

| PANDUIT PART # | STUD SIZE | | DIMENSIONS in. [mm] | | | | | TOOLS |
|---|---|---|---|---|---|---|---|---|
| | ENGLISH | METRIC | L ± .03 [0,51] | W ± .01 [0,25] | C ± .02 [0,38] | M ± .03 [0,51] | H ± .01 [0,25] | |
| PMV1-3FB | -- | M3 | .85 [21,6] | .23 [5,84] | .19 [4,83] | .71 [18,03] | .13 [3,30] | CT-100A<br>*CT-160<br>*CT-260<br>*CT-400<br>CT-600-A (CT-500CH)<br>CT-600-A (CT-550CH)<br>CT-1550<br>CT-1551<br>CT-2500 (CT-2550CH) |
| PV18-6F | #6 | M3,5 | .86 [21,8] | .30 [7,6] | .21 [5,3] | .69 [17,5] | .15 [3,8] | |
| PV18-6FN | #6 | M3,5 | .85 [21,6] | .24 [6,1] | .21 [5,3] | .69 [17,5] | .15 [3,8] | |
| PV18-8F | #8 | M4 | .93 [23,6] | .32 [8,1] | .25 [6,4] | .73 [18,5] | .17 [4,3] | |
| PV18-10F | #10 | -- | .93 [23,6] | .35 [8,9] | .25 [6,4] | .75 [19,1] | .20 [5,1] | |
| PV18-10FN | #10 | -- | .93 [23,6] | .31 [7,9] | .25 [6,4] | .75 [19,1] | .20 [5,1] | |
| PMV1-5FB | -- | M5 | .93 [23,6] | .36 [9,14] | .24 [6,10] | .76 [19,30] | .20 [5,1] | |

*PANDUIT APPROVED TOOL

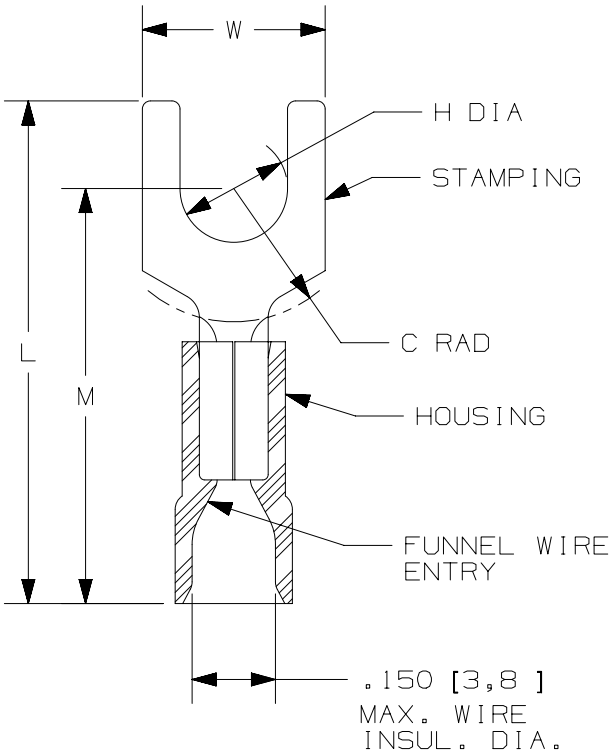


NOTES:

1. cULus LISTED FOR:
   A. 22-16 AWG [0,5-1,5 mm²] SOLID OR STRANDED COPPER WIRE
   B. 221°F [105°C] MAX. OPERATING TEMPERATURE
   C. 600V. MAX. BLDG WIRE
      (1000 V. MAX. IN SIGNS, FIXTURES & LUMINAIRES)
2. SEE www.panduit.com FOR PACKAGE QUANTITIES
3. MATERIAL:
   A. STAMPING: .032" [0,8] THK COPPER, TIN PLATED
   B. HOUSING: VINYL, RED
4. DIMENSIONS IN BRACKETS ARE METRIC EQUIVALENT
5. WIRE STRIP LENGTH: 5/16 $^{+1/32}_{-0}$ [7,9 $^{+0,8}_{-0}$]

c UL us
LISTED
587H
E52164

| REV | DATE | BY | CHK | APR | DESCRIPTION | ECN |
|---|---|---|---|---|---|---|
| 09 | 07/14 | MBY | JHNU | RGB | REVISED NOTES, MOVED TOOLS TO TABLE, REVISED CERTIFICATION | N41194BA-A41194 |
| 08 | 07.17.12 | BDK | LCA | VMB | ADDED PMV1-3FB AND PMV1-5FB. ADDED METRIC EQUIVALENT. CHANGE PACKAGING NOTE. REVISED INSTALLATION TOOLS NOTE. BROUGHT DRAWING TO CURRENT STANDARDS. | N41194BA-DC |

TITLE
2 PC. VINYL INSULATED, #22-18 BARREL, FORKS
CUSTOMER DRAWING

ITEM REVISION NAME: N41194BA/09
DATASET FILE NAME: N41194BA_DC/09A

PANDUIT™

UNLESS OTHERWISE SPECIFIED, DIMENSIONAL TOLERANCES ARE: IN [mm]
.X ± .XXX ±
.XX ± ANGLES ±
THIRD ANGLE PROJECTION

MATERIAL: SEE NOTES
DRAWING NUMBER: A41194

| DRAWN BY | DATE | CHK | SCALE | SHEET 1 OF 1 | SIZE |
|---|---|---|---|---|---|
| FES | - | FS | N.T.S. | | A |

D10100DA/12